GENERAL NOTES:

1. THIS DRAWING IS DIAGRAMMATIC ONLY AND DOES NOT REPRESENT FIELD CONDITIONS. NETWORK WIRING IS NOT SHOWN.
2. REFER TO DEVICE MANUALS FOR INSTALLATION AND WIRING REQUIREMENTS OF EACH DEVICE.

REFERENCE NOTES:

1. MODULES RECEIVING SIGNALS FROM GAS TRANSMITTERS ARE MOUNTED BELOW THE TRANSMITTERS. SEE SHEET D-713. NOTE THIS IS A DIAGRAMMATIC ILLUSTRATION. FIELD INSTALLATION MAY VARY.

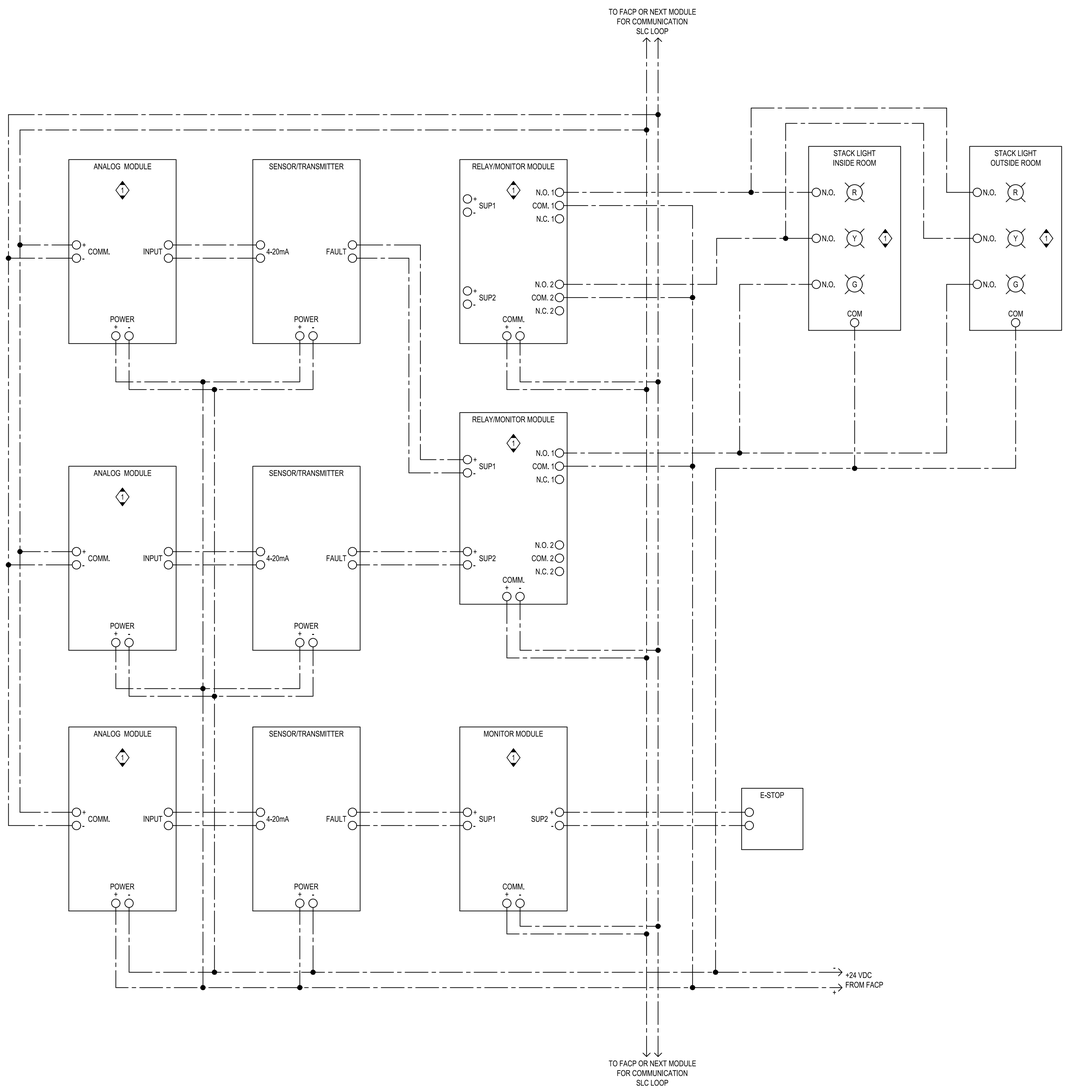

1 TYPICAL WIRING SCHEMATIC

NTS

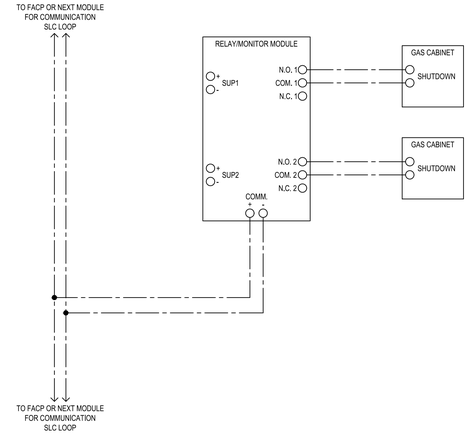

2 TYPICAL VALVE WIRING SCHEMATIC - TWO GAS CABINETS

NTS

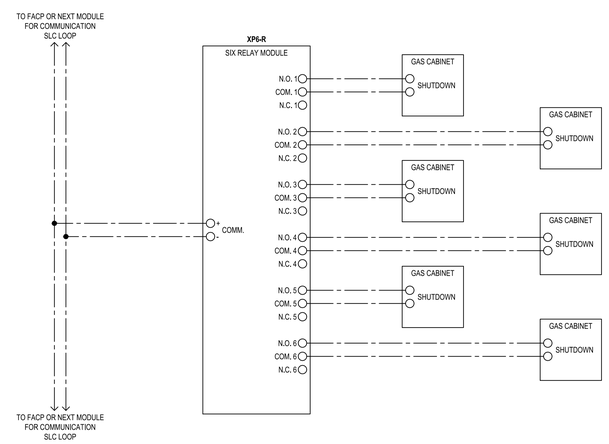

3 TYPICAL VALVE WIRING SCHEMATIC - SIX GAS CABINETS

NTS

5/16/2017 12:25 PM

Georgia Institute of Technology

exp U.S. Services Inc.
t: +1.404.975.5800 | f: +1.404.975.5850
211 Perimeter Center Parkway
Suite 750
Atlanta, GA 30346
USA
www.exp.com

• BUILDINGS • EARTH & ENVIRONMENT • ENERGY •
• INDUSTRIAL • INFRASTRUCTURE • SUSTAINABILITY •

CAUTION: DO NOT SCALE DRAWINGS.
THIS REPRODUCTION MAY BE AT A SIZE DIFFERENT THAN ORIGINALLY DRAWN. EXP ASSUMES NO RESPONSIBILITY FOR INCORRECT SCALING. UNAUTHORIZED REPRODUCTION OR REUSE IS STRICTLY PROHIBITED. NOT PUBLISHED - ALL RIGHTS RESERVED. EXP EXPRESSLY DISCLAIMS RESPONSIBILITY ARISING FROM UNAUTHORIZED USE OF THESE DRAWINGS AND NOTES. AUTHORIZATION MUST BE IN WRITING.

© exp. 2017

No.	Revision	By:	Date

Professional Seal(s)

Drawn By:

Checked By:

Approved By:

Date Printed: 05-16-2017

File Name:

Project Title

Dwg. Title
PROCESS CONTROLS SCHEMATICS

Project No.

GT Project No.

Dwg. No.
D-712

Rev. No.